Ecen 153 Pre Project Work

Dylan Tromley

Parity Gen

1.

Even Parity (Type 0)

$P = D_3 \oplus D_2 \oplus D_1 \oplus D_0$

Odd parity (Type 1)

$P = \overline{D_3 \oplus D_2 \oplus D_1 \oplus D_0}$

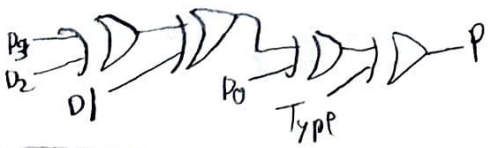

D_3	D_2	D_1	D_0	P_E (Type 0)	P_O (Type 1)
0	0	0	0	0	1
0	0	0	1	1	0
0	0	1	0	1	0
0	0	1	1	0	1
0	1	0	0	1	0
0	1	0	1	0	1
0	1	1	0	0	1
0	1	1	1	1	0
1	0	0	0	1	0
1	0	0	1	0	1
1	0	1	0	0	1
1	0	1	1	1	0
1	1	0	0	0	1
1	1	0	1	1	0
1	1	1	0	1	0
1	1	1	1	0	1

2.

D_3	D_2	D_1	D_0	P	Type 0 E_E	Type 1 E_O
0	0	0	0	0	0	1
0	0	0	1	1	1	0
0	0	1	0	1	1	0
0	0	1	1	0	0	1
0	1	0	0	1	1	0
0	1	0	1	0	0	1
0	1	1	0	0	0	1
0	1	1	1	1	1	0
1	0	0	0	1	1	0
1	0	0	1	0	0	1
1	0	1	0	0	0	1
1	0	1	1	1	1	0
1	1	0	0	0	0	1
1	1	0	1	1	1	0
1	1	1	0	1	1	0
1	1	1	1	0	0	1

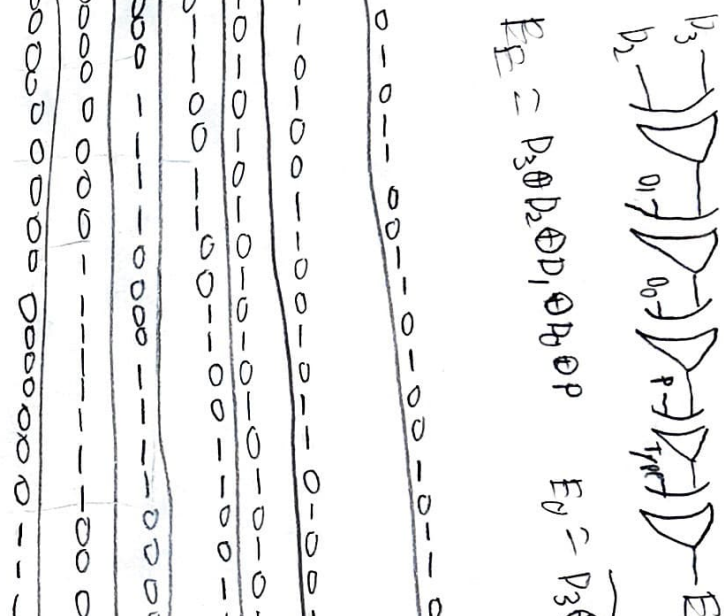

$E_E = D_3 \oplus D_2 \oplus D_1 \oplus D_0 \oplus P$

$E_O = \overline{D_3 \oplus D_2 \oplus D_1 \oplus D_0 \oplus P}$

Dylan Thornburg
ECEN 153L

PreProject TestBench

Part 1

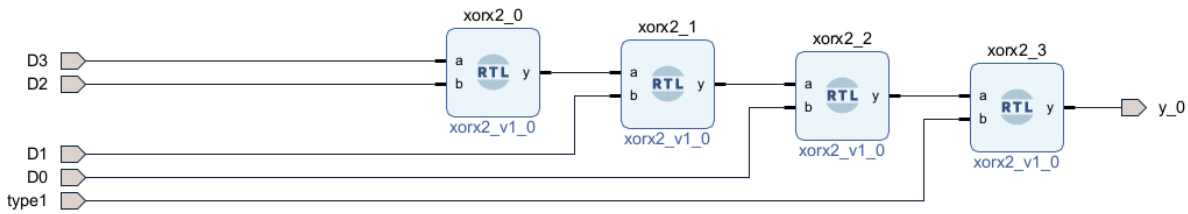

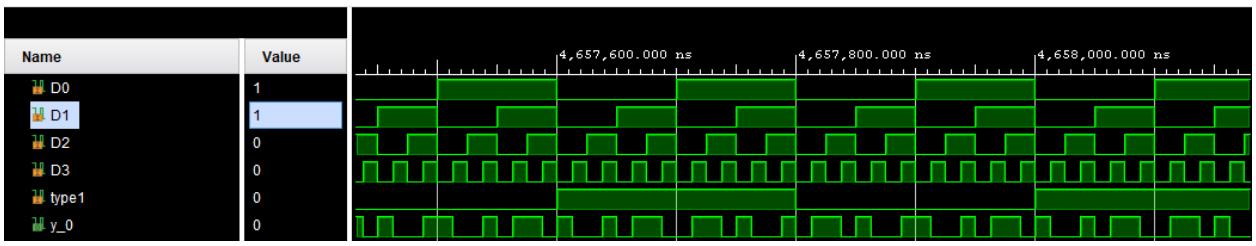

y_0=p

type1 just means type. Verilog doesn't let me name it as "type" tho.
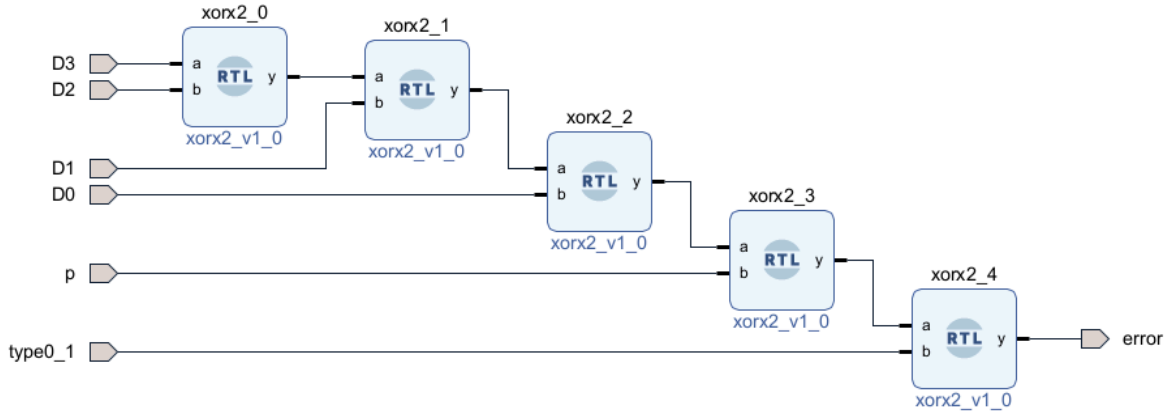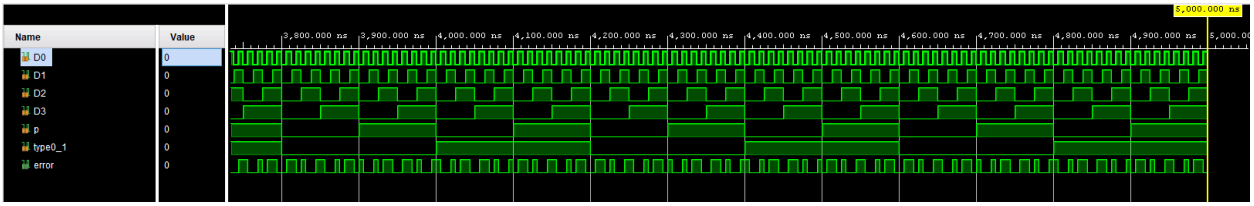
Part 2